WIRING DIAGRAM

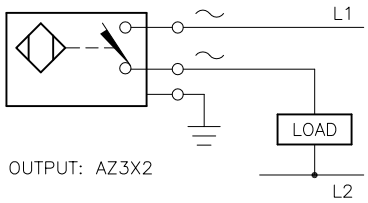

OUTPUT: AZ3X2

WARNING: NO SHORT-CIRCUIT PROTECTION
ALWAYS WIRE A LOAD IN SERIES WITH THE SENSOR.

LOCKNUT LN-M18

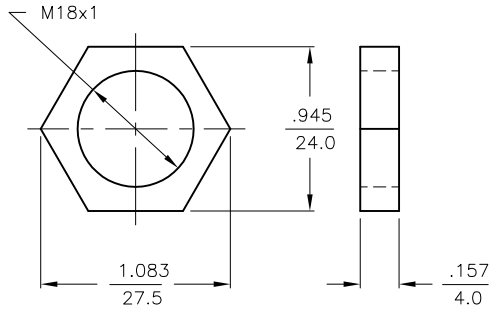

SPECIFICATIONS

OPERATING VOLTAGE	20–250 VAC/DC
LINE FREQUENCY	40–60 Hz
HYSTERESIS (DIFFERENTIAL TRAVEL)	3–15% (5% TYPICAL)
MAX. VOLTAGE DROP	≤ 7.0 V
OUTPUT FUNCTION	NORMALLY OPEN 2–WIRE AC SELF–CONTAINED
SHORT–CIRCUIT PROTECTED	NO
CONTINUOUS LOAD CURRENT	≤ 500 mA
OFF–STATE (LEAKAGE) CURRENT	≤ 1.7 mA
MINIMUM LOAD CURRENT	≥ 5.0 V
INRUSH CURRENT	≤ 8.0 A (≤ 10 ms/5 Hz)
TIME DELAY BEFORE AVAILABILITY	≤ 25 ms
POWER–ON EFFECT PROTECTION	INCORPORATED
PROTECTION AGAINST TRANSIENTS	5 kV, 10 ms, 10 kΩ
OPERATING TEMPERATURE	–25°C to +70°C(–13°F to +158°F)
ENCLOSURE	MEETS NEMA 1, 3, 4, 6, 13 AND IEC IP67
SHOCK	30 g, 11 ms
VIBRATION	55 Hz, 1 mm AMPLITUDE (IN ALL 3 PLANES)
LED FUNCTION	GREEN: POWER ON RED: OUTPUT ENERGIZED
SENSING RANGE	5 mm = .197" (NOMINAL)
SWITCHING FREQUENCY	20 Hz
REPEATABILITY	RATED OPERATING DISTANCE
EMBEDABLE (SHIELDED)	YES
MAX. CABLE DIA.	4.5–8.0 mm

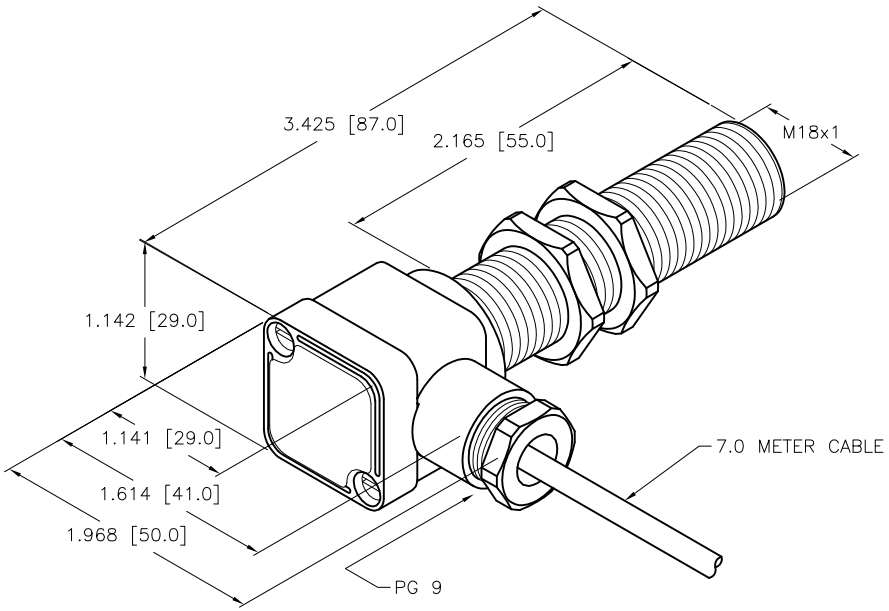

SOURCE DRAWING - FOR REFERENCE ONLY

NOTE:

1. MATERIALS:
   - BARREL – CHROME PLATED BRASS
   - LOCKNUTS – CHROME PLATED BRASS
   - SENSING FACE – PA12–GF30 PLASTIC
   - TERMINAL CHAMBER – PA12–GF30 PLASTIC
   - COVER – PEI PLASTIC
   - SCREWS – STAINLESS STEEL
   - CABLE GLAND – PA, HOSTAFORM (POM); NBR SEAL

REV	DESCRIPTION	BY	DATE	ECO NO.
B	UPDATE ID NUMBER PER HARMONIZATION PROJECT	CBM	11/06/17	

RELATED DOCUMENTS
1.
2.
3.
4.

3RD ANGLE PROJECTION

THIS DRAWING IS CONFIDENTIAL AND THE PROPERTY OF TURCK INC. USE OF THIS DOCUMENT WITHOUT WRITTEN PERMISSION IS PROHIBITED.

TURCK

3000 CAMPUS DRIVE
MINNEAPOLIS, MN 55441
1–800–544–7769
(763) 553–7300
(763) 553–0708 fax
www.turck.us

MATERIAL: SEE NOTES

FINISH: SEE NOTES

ALL DIMENSIONS DISPLAYED ON THIS DRAWING ARE FOR REFERENCE ONLY

CONTACT TURCK FOR MORE INFORMATION

DRFT: RDS | DATE: 03/29/10
APVD: | SCALE: 1=2.0

UNIT OF MEASUREMENT
INCH [MILLIMETER]
DO NOT SCALE THIS DRAWING

DESCRIPTION: BI5–G18SK–AZ3X2 7M

IDENTIFICATION NO.: 4331498 | REV: B

FILE: 4331498 | SHEET 1 OF 1